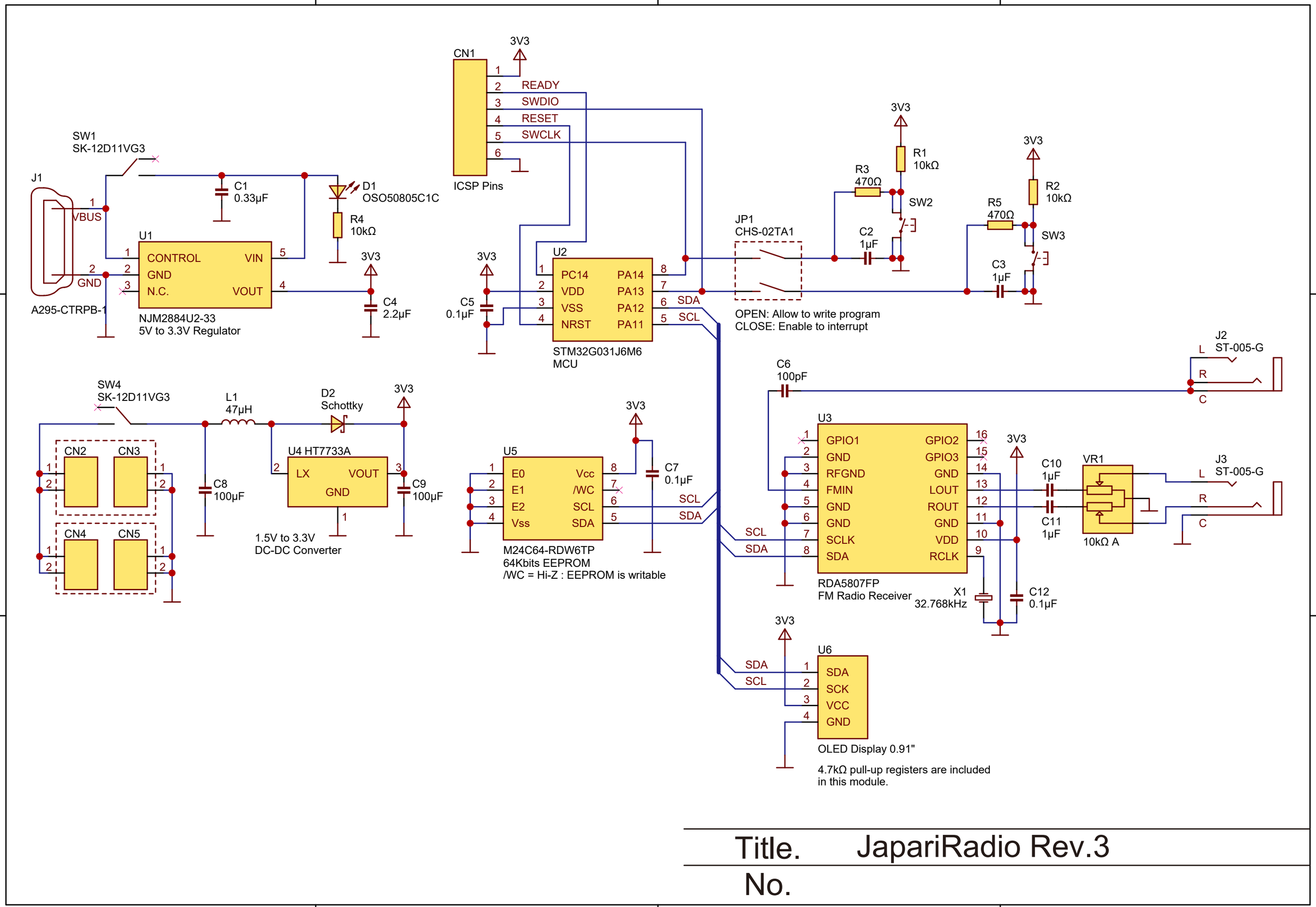
CN1
3V3
READY
SWDIO
RESET
SWCLK
ICSP Pins
SW1
SK-12D11VG3
J1
VBUS
GND
A295-CTRPB-1
C1
0.33μF
D1
OSO50805C1C
R4
10kΩ
U1
CONTROL
GND
N.C.
VIN
VOUT
NJM2884U2-33
5V to 3.3V Regulator
C4
2.2μF
C5
0.1μF
U2
PC14
VDD
VSS
NRST
PA14
PA13
PA12
PA11
SDA
SCL
STM32G031J6M6
MCU
JP1
CHS-02TA1
OPEN: Allow to write program
CLOSE: Enable to interrupt
R3
470Ω
R1
10kΩ
SW2
C2
1μF
R5
470Ω
R2
10kΩ
SW3
C3
1μF
SW4
SK-12D11VG3
L1
47μH
D2
Schottky
CN2
CN3
CN4
CN5
C8
100μF
U4 HT7733A
LX
VOUT
GND
C9
100μF
1.5V to 3.3V
DC-DC Converter
U5
E0
E1
E2
Vss
Vcc
/WC
SCL
SDA
C7
0.1μF
M24C64-RDW6TP
64Kbits EEPROM
/WC = Hi-Z : EEPROM is writable
C6
100pF
J2
ST-005-G
L
R
C
U3
GPIO1
GND
RFGND
FMIN
GND
GND
SCLK
SDA
GPIO2
GPIO3
GND
LOUT
ROUT
GND
VDD
RCLK
RDA5807FP
FM Radio Receiver
X1
32.768kHz
C12
0.1μF
C10
1μF
C11
1μF
VR1
10kΩ A
J3
ST-005-G
U6
SDA
SCK
VCC
GND
OLED Display 0.91"
4.7kΩ pull-up registers are included
in this module.
Title.
JapariRadio Rev.3
No.